Horton Bearing Services

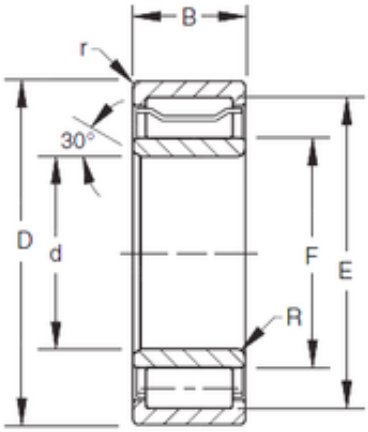

A-5244-WM Bearing 2D drawings and 3D CAD models

Bearing A-5244-WM

Bearing No. A-5244-WM

Bore Diameter	220 mm
Outer Diameter	367 mm
d	220 mm
F	260 mm
D	400 mm
E	367 mm
B	133,35 mm
C	133,35 mm
R	9,5 mm
r	3 mm